DC-Microgrids Worldwide

Fraunhofer IISB Installation

Julian Kaiser julian.kaiser@iisb.fraunhofer.de
Group DC Grids
www.iisb.fraunhofer.de/dc-grids

Fraunhofer IISB

Worldwide Activities

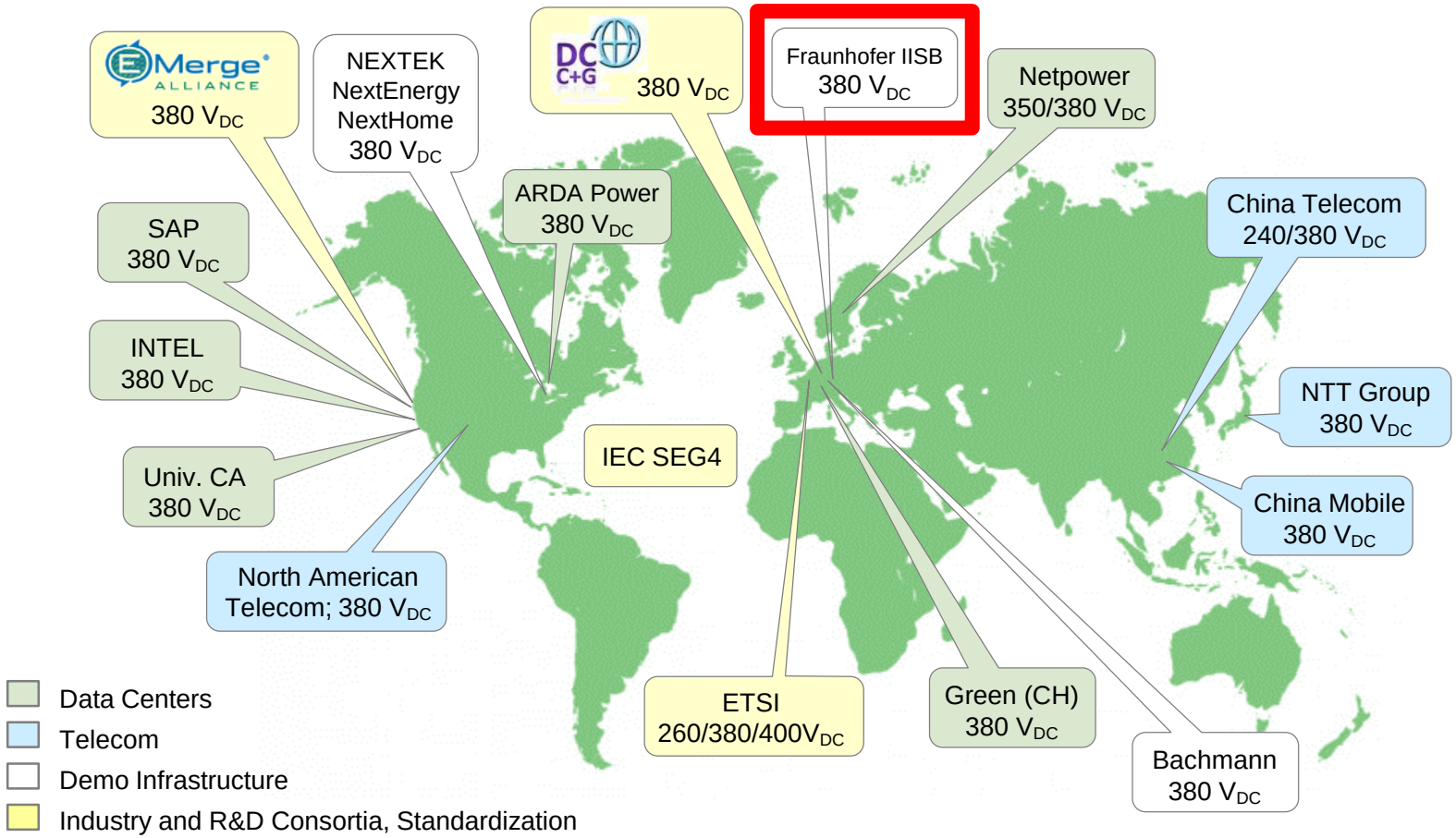

Julian Kaiser
Intelligent Energy Systems / DC Grids

Fraunhofer IISB

Origin: DCC+G

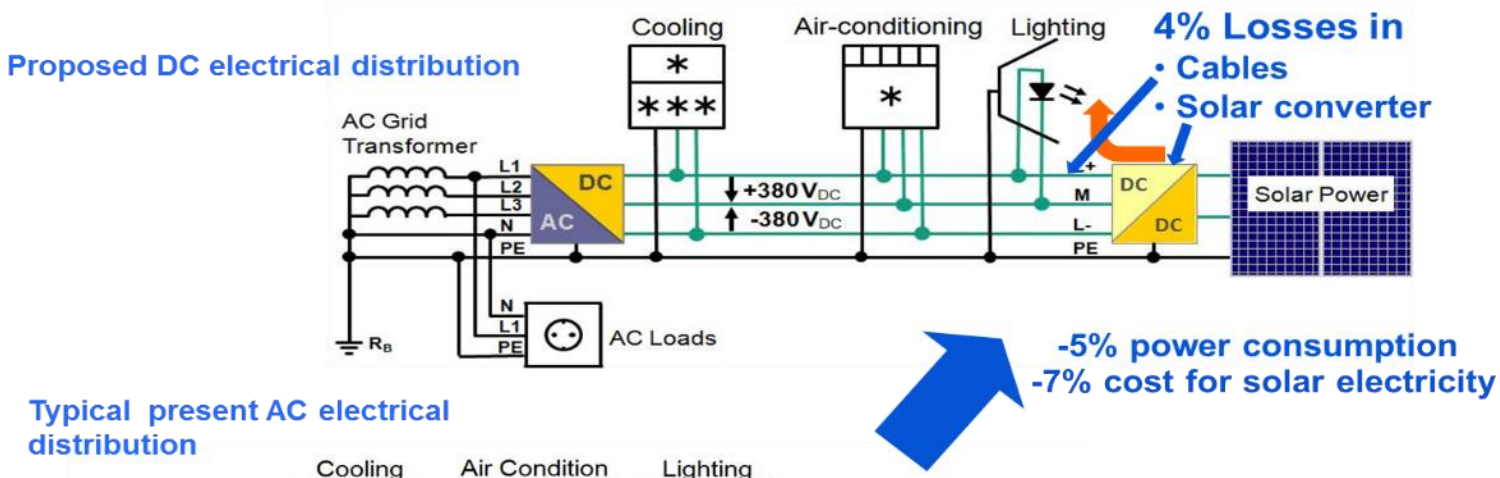

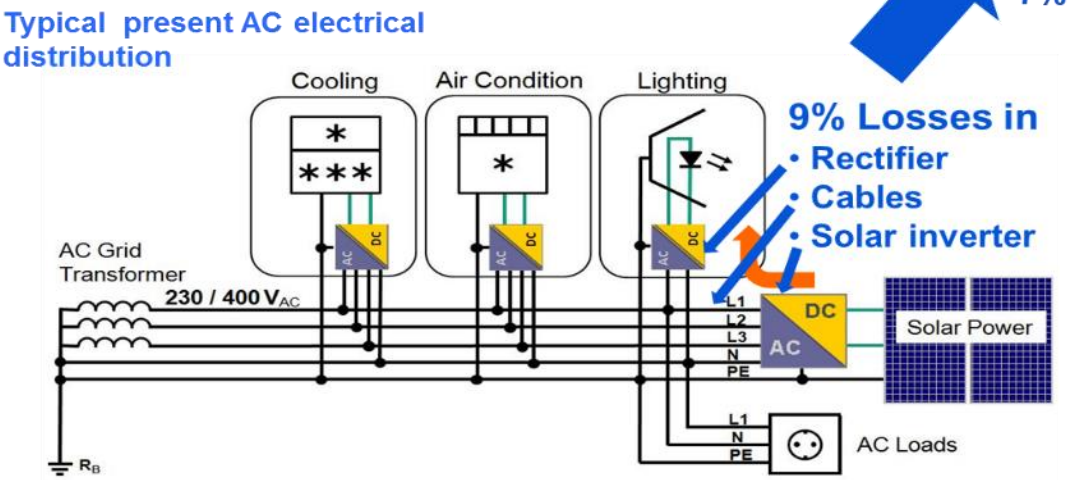

- „DC components and grid“
- European project (2012 – 2015)
- Reduce device size and cost
- Increase efficiency and solar power usage
- Less conduction losses

Julian Kaiser
Intelligent Energy Systems / DC Grids

Origin: DCC+G

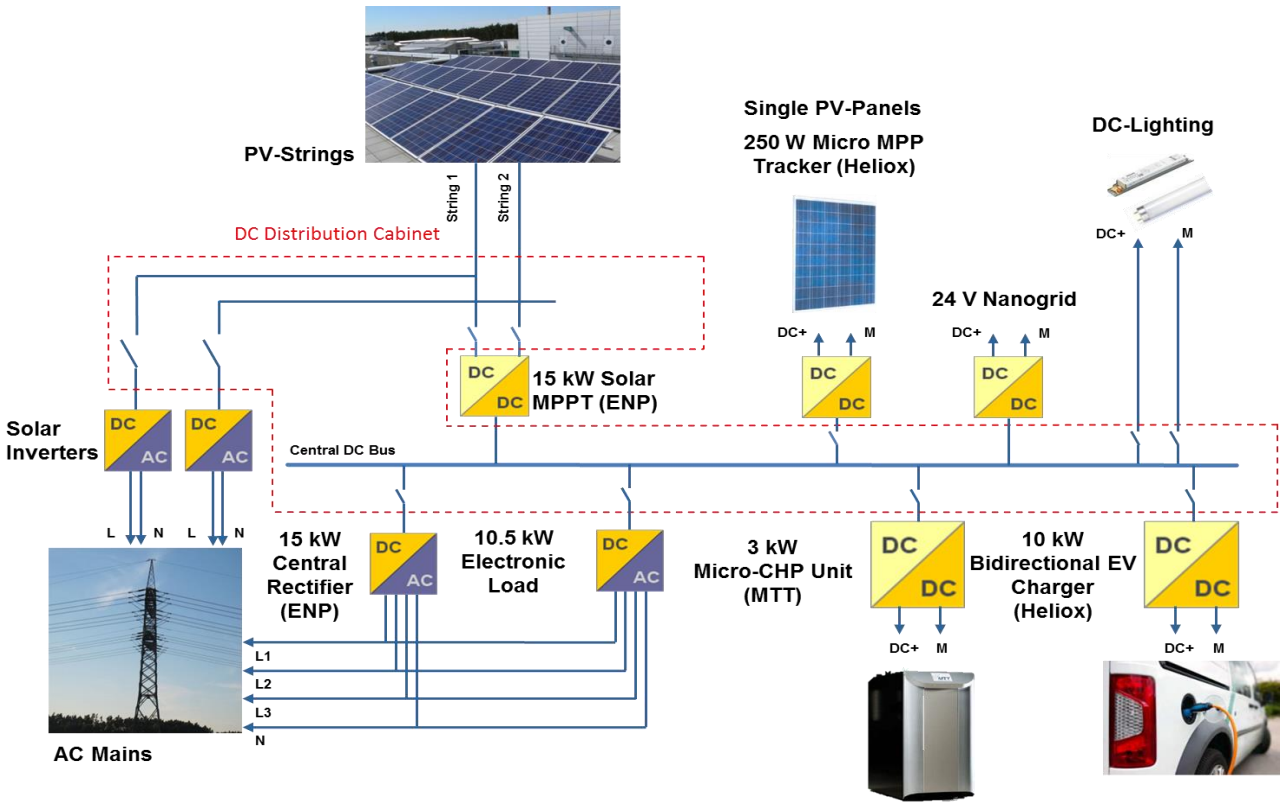

- First test installation for demonstration purposes at Fraunhofer IISB in Erlangen
- Various renewable energy sources like photovoltaic and µCHP
- Typical loads for office buildings
- Power ~20 kW
- Still in use today with some modifications – integration into building-wide DC microgrid

Julian Kaiser
Intelligent Energy Systems / DC Grids

Application Platform for Decentralized Energy Systems

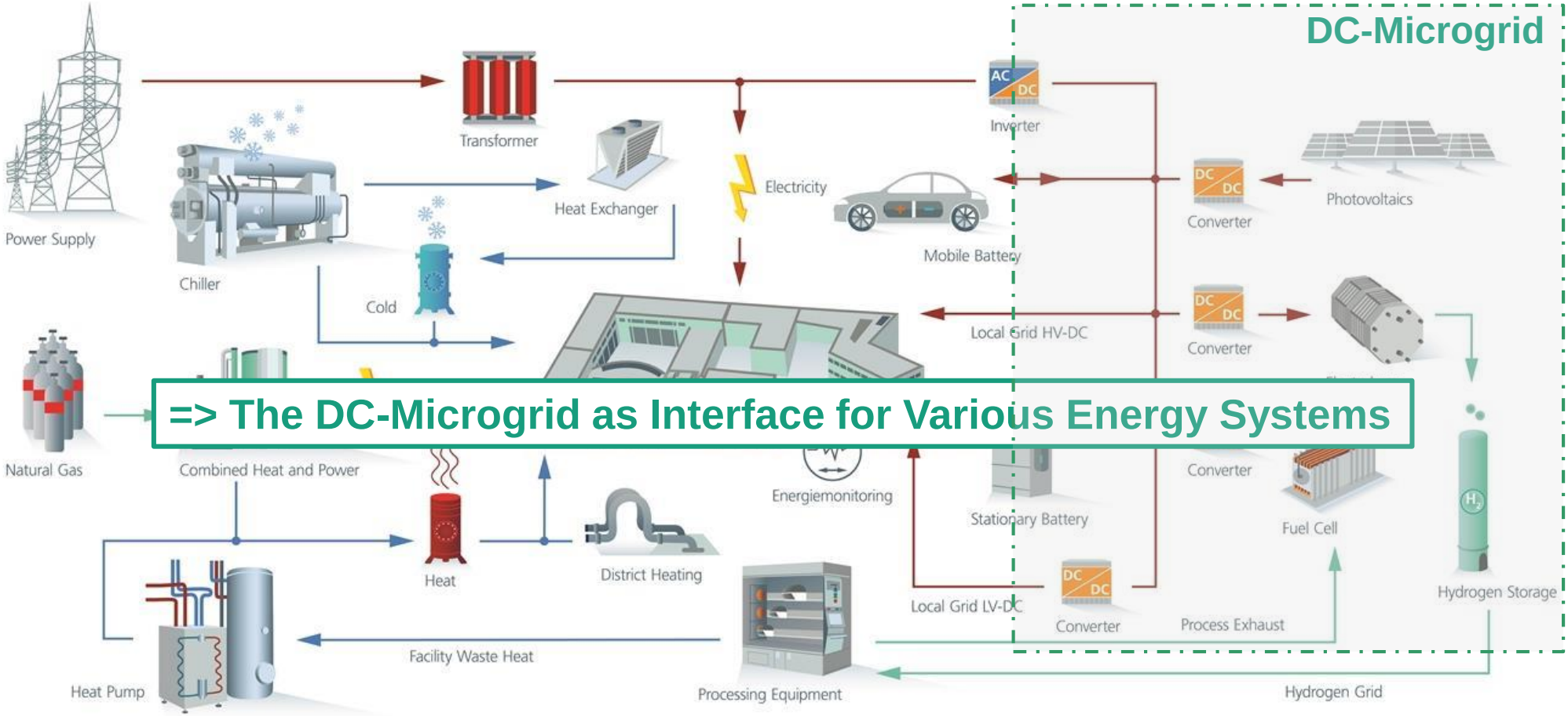

=> The DC-Microgrid as Interface for Various Energy Systems

Julian Kaiser
Intelligent Energy Systems / DC Grids

The High-Power DC Grid at Fraunhofer IISB

in field operation for peak load shaping

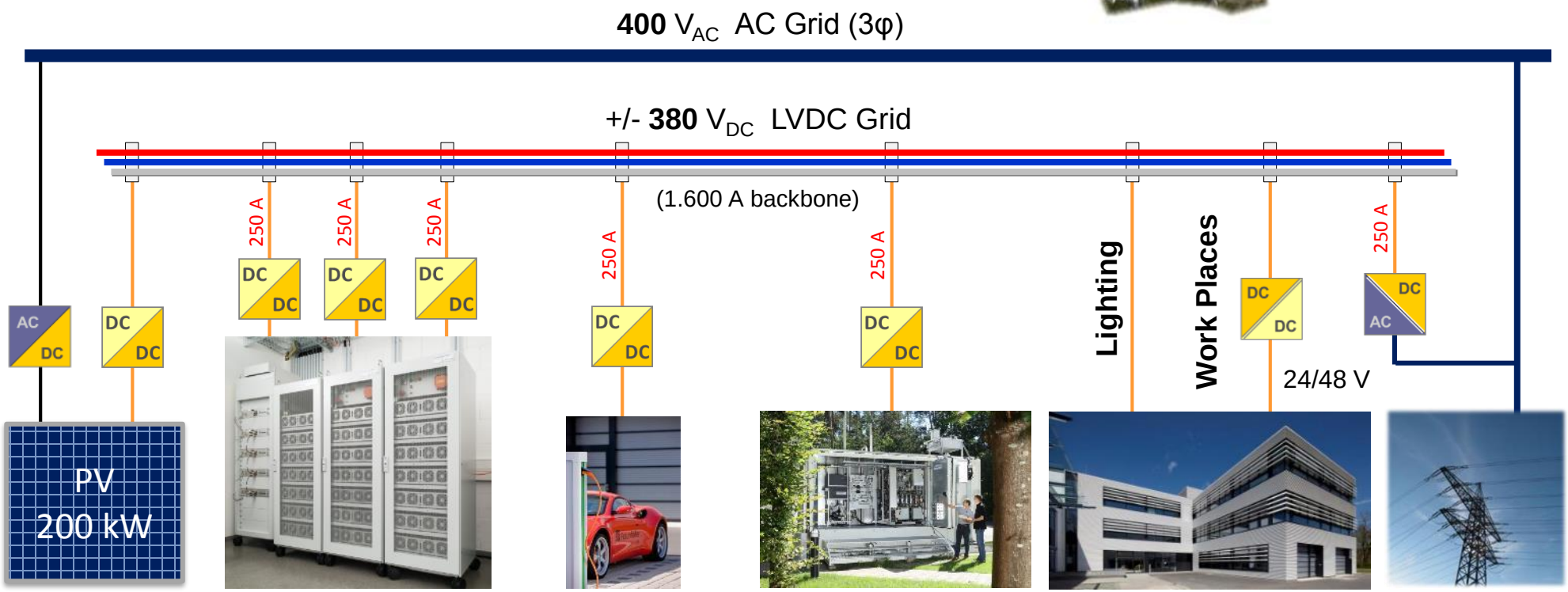

Photovoltaic

Li-Ion Batteries
(3x 20 kWh, 3x 100 kW_p)

DC Charging

Chemical Storage
(elektrolyzer ⇨ LOHC ⇨ fuel cell)

Office Building

AC Grid

Julian Kaiser
Intelligent Energy Systems / DC Grids

Fraunhofer IISB

Grid Structure

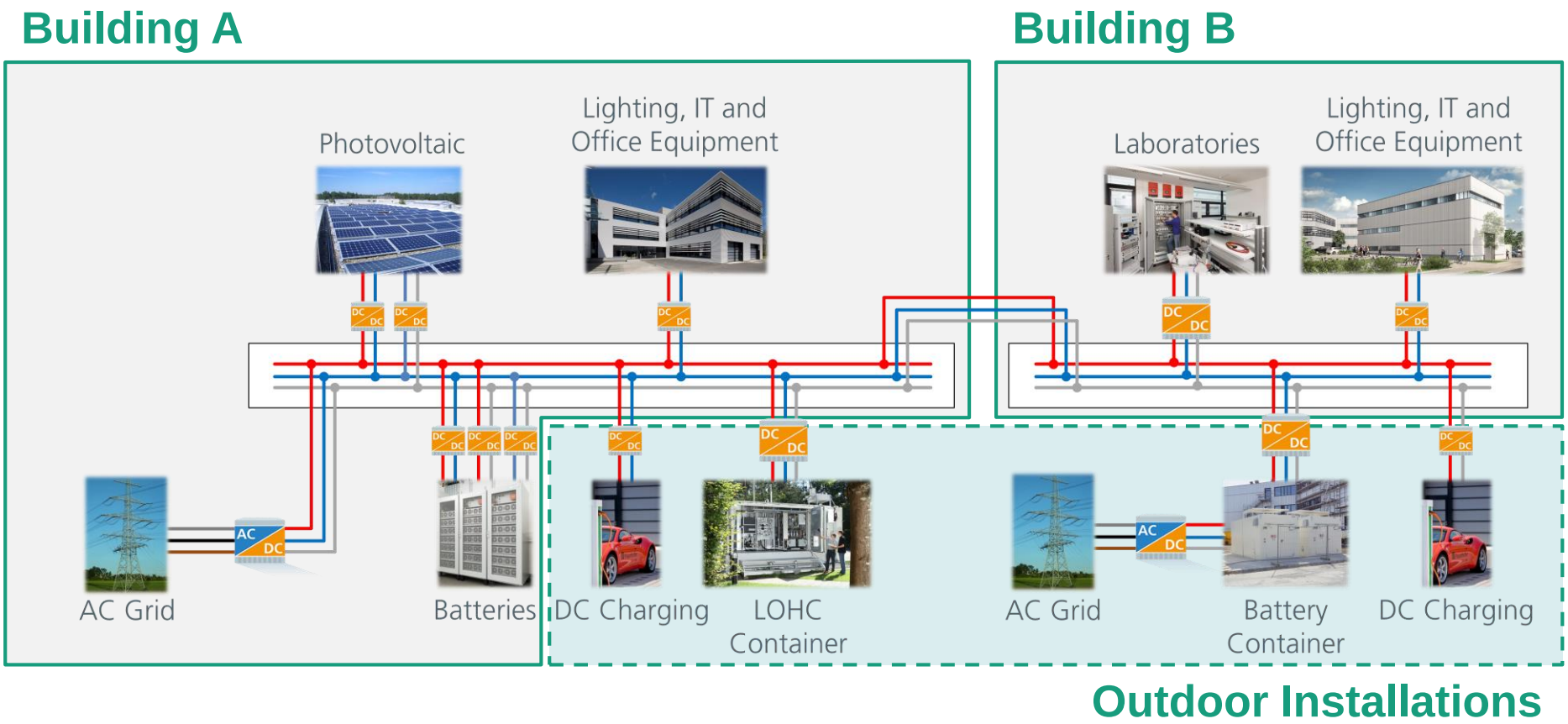

Julian Kaiser
Intelligent Energy Systems / DC Grids

Fraunhofer IISB

Power Distribution

Bidirectional
100 kW AC/DC

11x channels
80 – 250 A, main busbars up to 1600 A

Control
Power supply

- Main distribution cabinet
- High-power DC switches for bipolar operation
- Pre- and discharge resistors where needed
- Voltage and current measurement for every channel
- Data logging to database via Modbus
- Online monitoring
- Overcurrent protection
- Insulation monitoring

Julian Kaiser
Intelligent Energy Systems / DC Grids

Fraunhofer IISB

Power Distribution

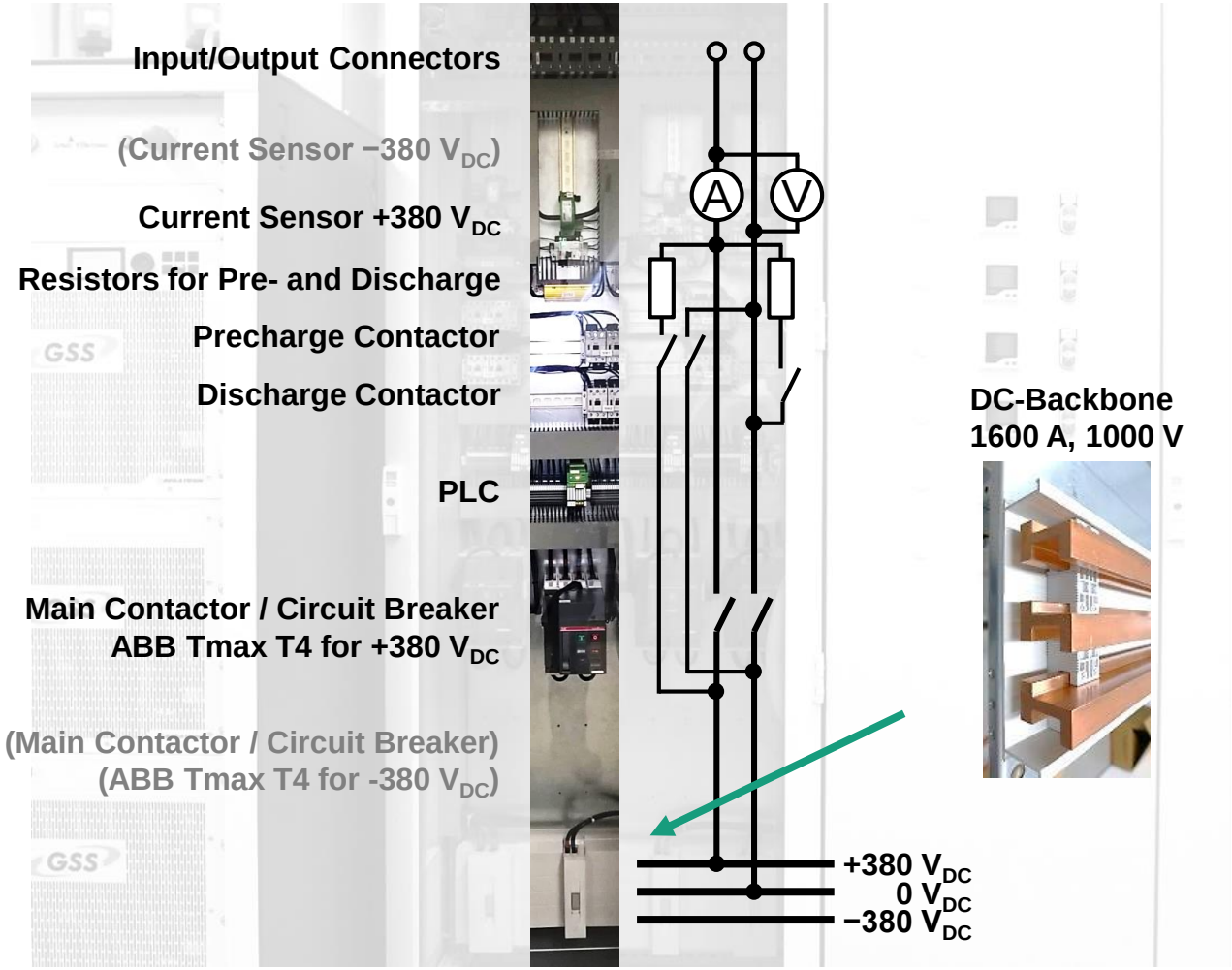

- Main distribution cabinet
- High-power DC switches for bipolar operation
- Pre- and discharge resistors where needed
- Voltage and current measurement for every channel
- Data logging to database via Modbus
- Online monitoring
- Overcurrent protection
- Insulation monitoring

Julian Kaiser
Intelligent Energy Systems / DC Grids

Fraunhofer IISB

Power Distribution

- High-power DC switches ABB Tmax
- Remote actuation
- Overcurrent protection
- Connection of large sources and loads

- Insulation monitoring for IT-system
- Several distributed and coordinated devices

- MCCB style (four pole)
- Remote actuation
- Overcurrent protection
- Connection of branch circuits and smaller devices

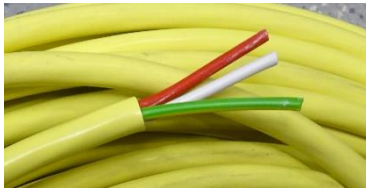

- DC cabling
- Color coding according to latest version of IEC 60445

Julian Kaiser
Intelligent Energy Systems / DC Grids

Fraunhofer IISB

Energy Storage Systems

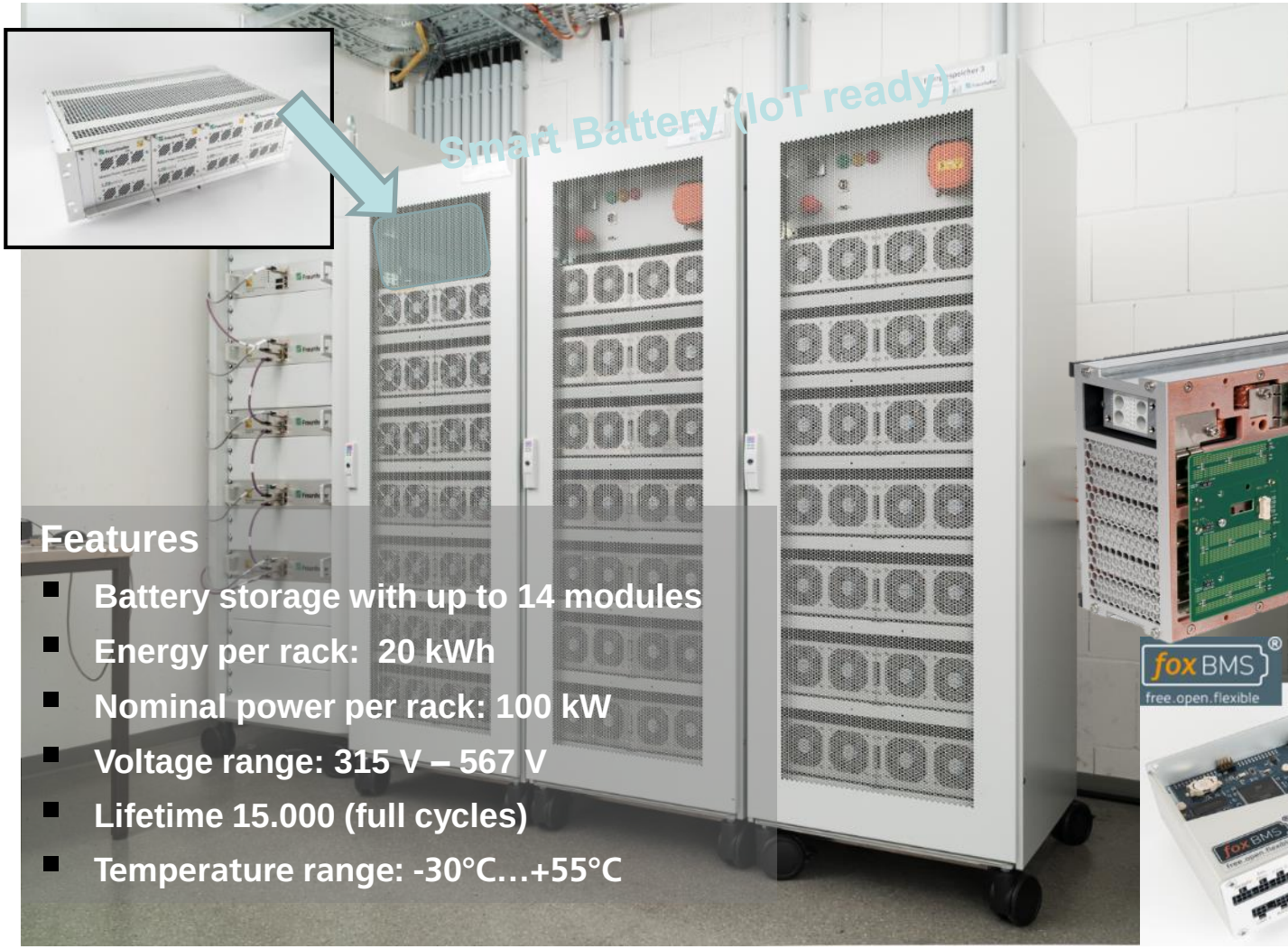

Features

- Battery storage with up to 14 modules
- Energy per rack: 20 kWh
- Nominal power per rack: 100 kW
- Voltage range: 315 V – 567 V
- Lifetime 15.000 (full cycles)
- Temperature range: -30°C…+55°C

Julian Kaiser
Intelligent Energy Systems / DC Grids

Fraunhofer IISB

DC Lighting

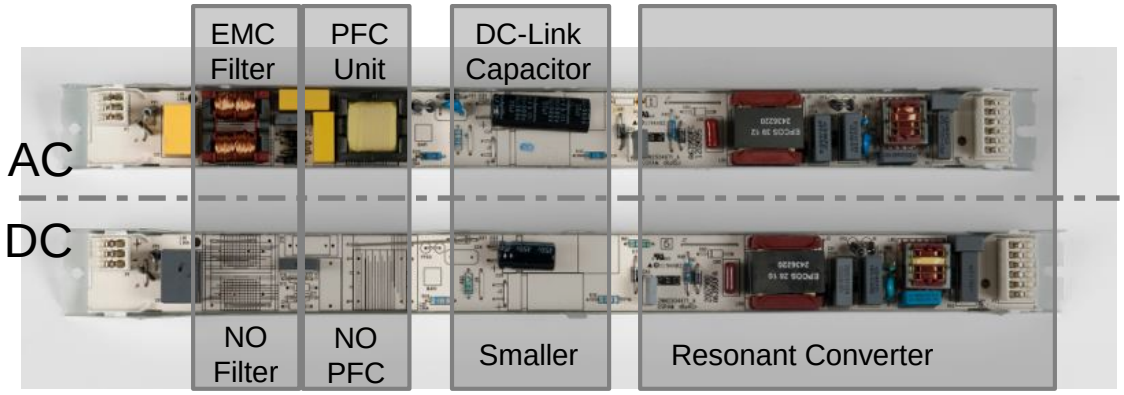

- Conversion of electronic AC lamp ballast for fluorescent lighting
- Connection to the DC-link
- Operation with 380 V is possible
- Control and switching either with bus system (EIB/KNX) or with semiconductor switch

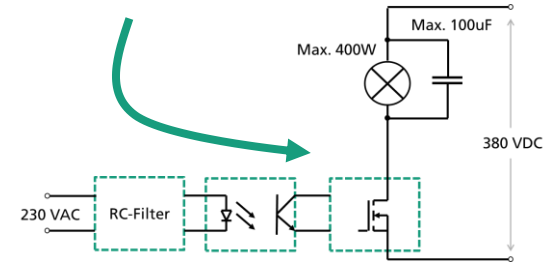

- 380 V DC LED lighting (from DCC+G)
- 48 V DC LED lighting for offices and laboratories

Julian Kaiser
Intelligent Energy Systems / DC Grids

Fraunhofer IISB

Office DC Power Supply

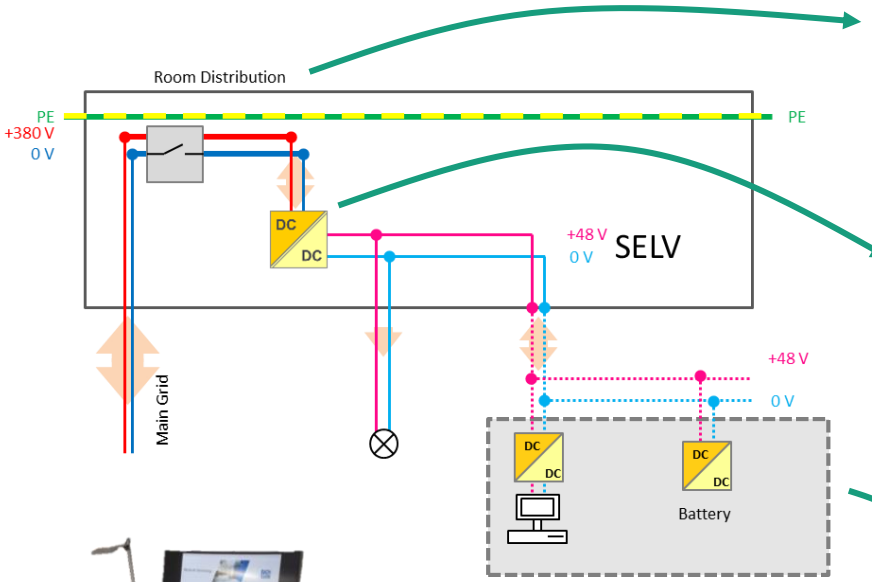

- Bidirectional isolated 48 V supply for every office
- Compact low-cost non-isolated converters for office appliances (laptop, monitor)
- Safety for users
- High efficiency
- Optional energy storage for distributed USV functionality

Julian Kaiser
Intelligent Energy Systems / DC Grids

Fraunhofer IISB

High Power DC Charging

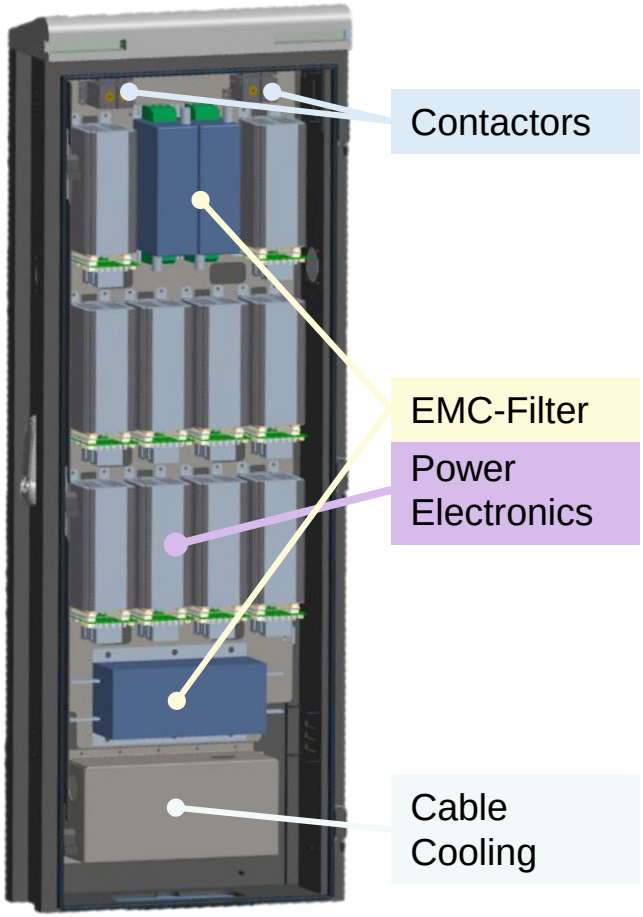

- Non-isolated electric vehicle DC charging
- Modular power electronic converters for easy scalability
- Flexible power sharing between vehicles
- High efficiency and compact volume
- For future vehicle requirements up to 1000 V and 150 kW
- Bipolar load (760 V)

Julian Kaiser
Intelligent Energy Systems / DC Grids

Fraunhofer IISB

Voltage Specification used in the Fraunhofer DC-Grid

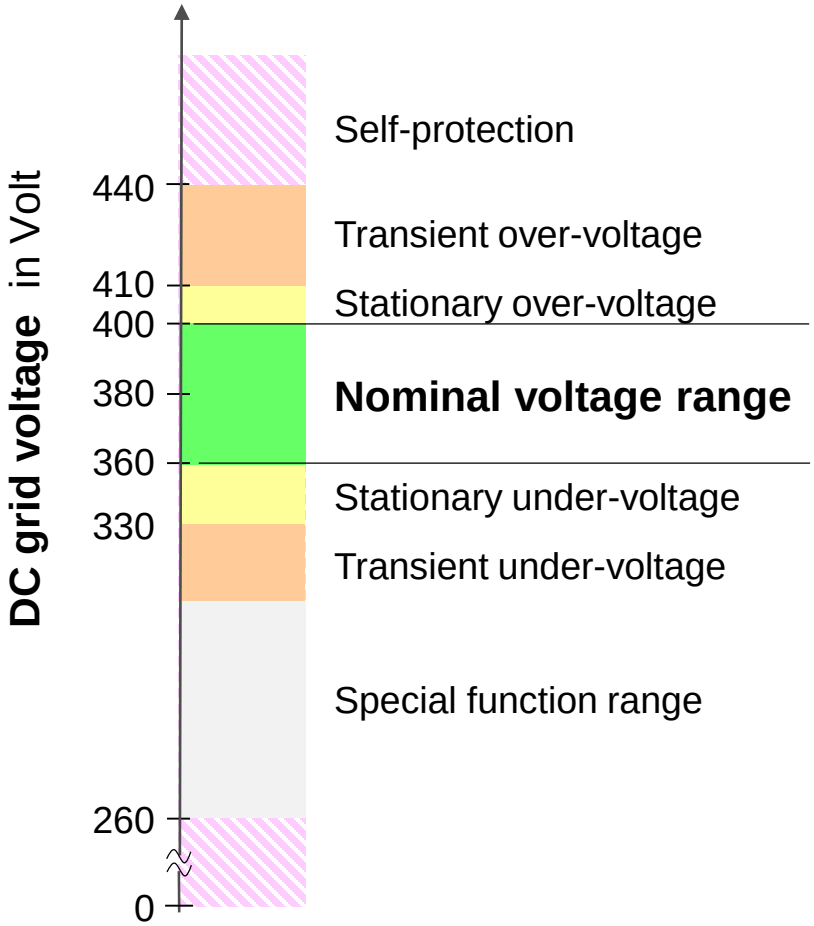

Behavior of devices and components
Switch-off for self-protection allowed
Transient operation with limited functionality and power derating
Operation with full functionality, power derating allowed
Operation with specified functionality
Operation with full functionality, power derating allowed
Transient operation with limited functionality and power derating
To be used for various protection and safety functions Emergency mode (e.g.): only dedicated loads, like emergency lighting or IT-server, are allowed to stay operational

Julian Kaiser
Intelligent Energy Systems / DC Grids

Fraunhofer IISB

Droop control - a method to control a grid without a superordinate master

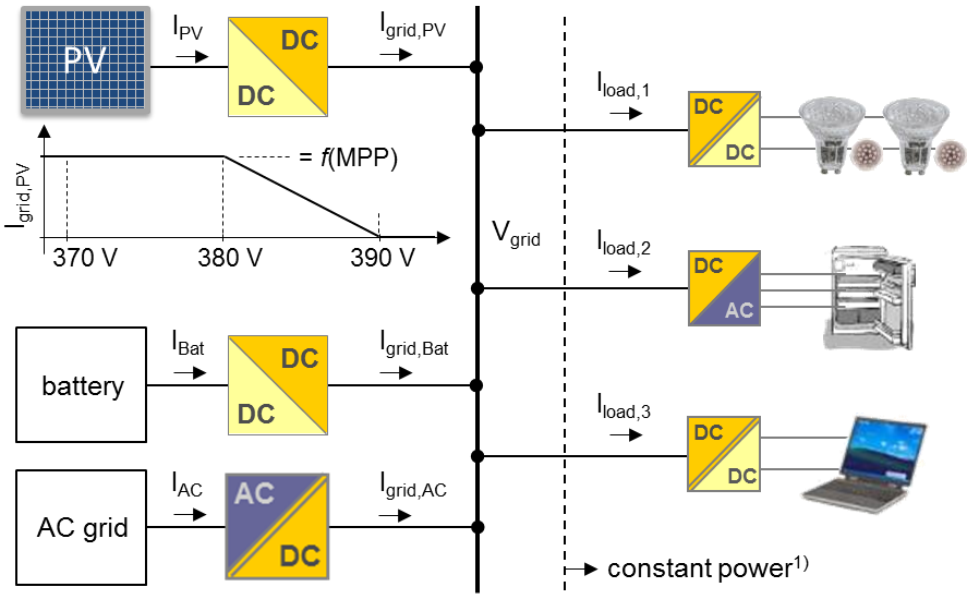

- The grid voltage (V_{grid}) serves as the central control parameter
- All feed-in converters behave like voltage sources with internal resistance

<u>Advantages</u>

- No superordinate grid controller necessary
- Maximum in reliability, availability and flexibility
- High level functions can be realized by changing the droop characteristics

<u>Challenges</u>

- Ensuring unconditional dynamic grid stability

Julian Kaiser
Intelligent Energy Systems / DC Grids

Fraunhofer IISB

Droop control - a method to control a grid without a superordinate master

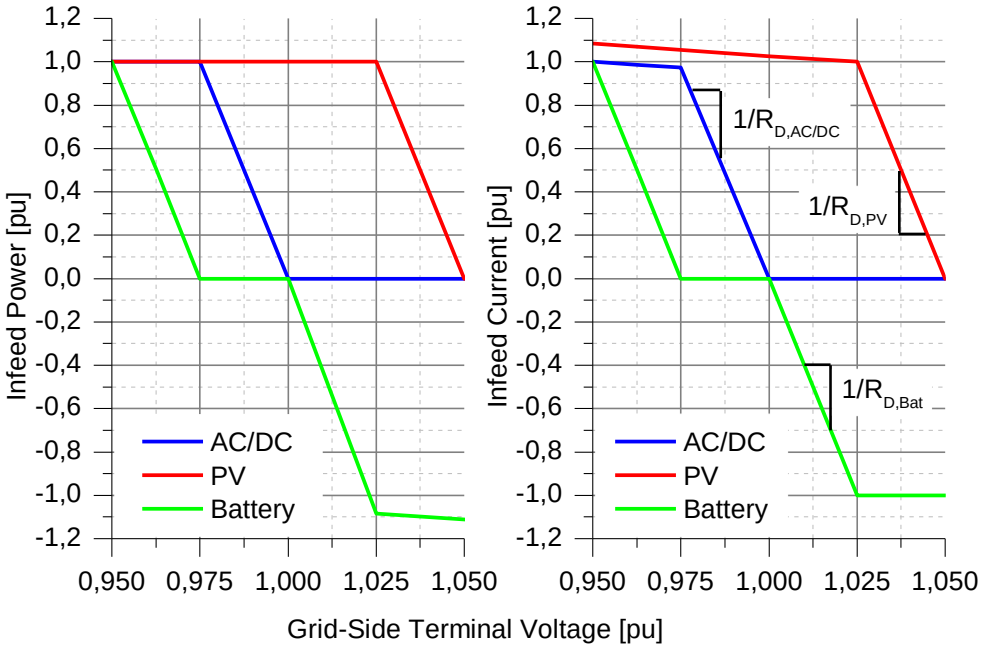

- The grid voltage (V_{grid}) serves as the central control parameter
- All feed-in converters behave like voltage sources with internal resistance

<u>Advantages</u>

- No superordinate grid controller necessary
- Maximum in reliability, availability and flexibility
- High level functions can be realized by changing the droop characteristics

<u>Challenges</u>

- Ensuring unconditional dynamic grid stability

Julian Kaiser
Intelligent Energy Systems / DC Grids

Fraunhofer IISB

How to measure stability in a DC grid?

Functional principle:

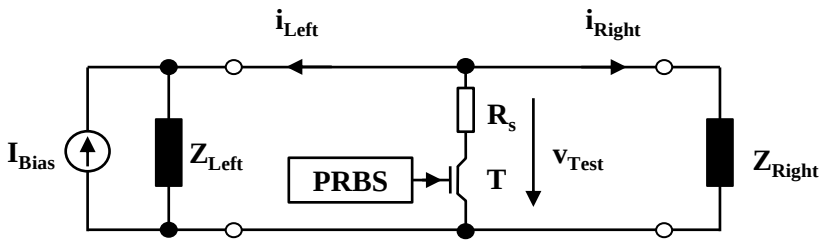

Example (DC/DC Converter (Grid Manager)):

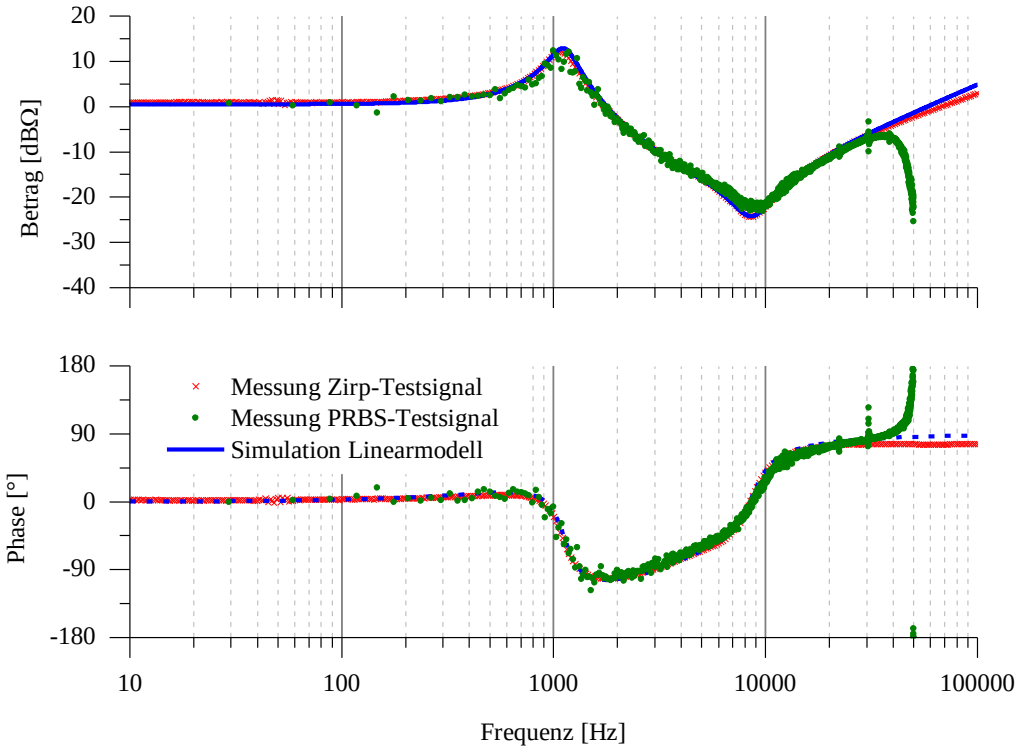

Julian Kaiser
Intelligent Energy Systems / DC Grids

Fraunhofer IISB

Current DC Projects

DC-Schutzorgane (“DC safety elements”) ■ BMWi Research Project

SCHUTZ ⊕-DC-⊖ ORGANE

- “Protection concept and devices for future direct current grids”
- **See presentation at ICDCM 2019 for current results**

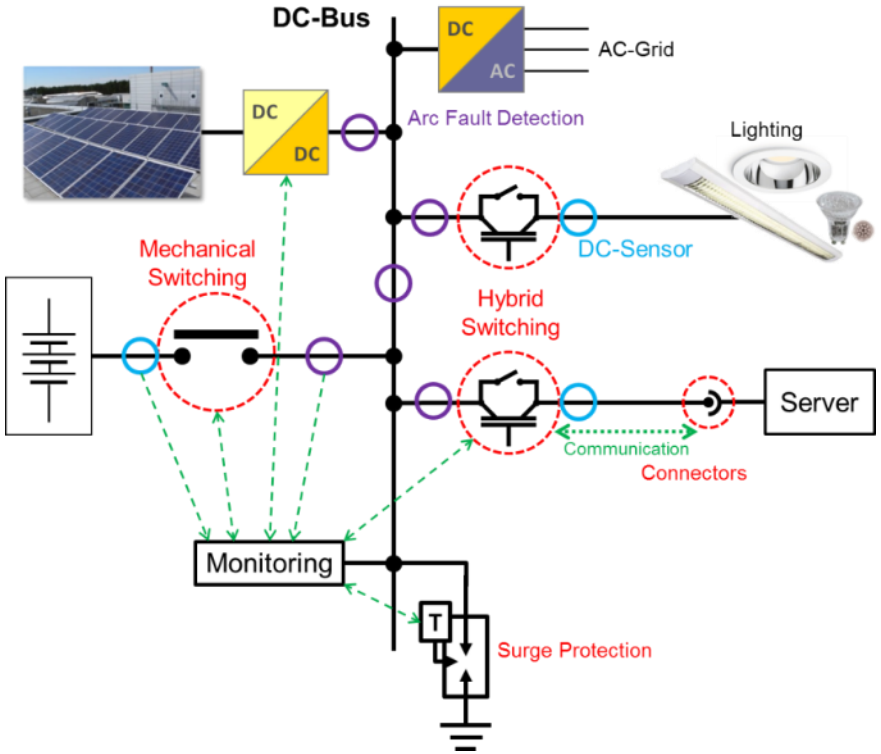

ABL
E-T-A ENGINEERING TECHNOLOGY
BENDER
BACH MANN
BSG
DEHN
Fraunhofer IISB
PHOENIX CONTACT

- Funding volume ca. 1.700.00 Mio. €
- Duration 12/2016 – 11/2019

Julian Kaiser
Intelligent Energy Systems / DC Grids

Fraunhofer IISB

Current DC Projects

DC-Industrie ■ BMWi Research Project

- Increasing industrial plant energy efficiency by 10 %
- Reducing cost for devices up to 20 %

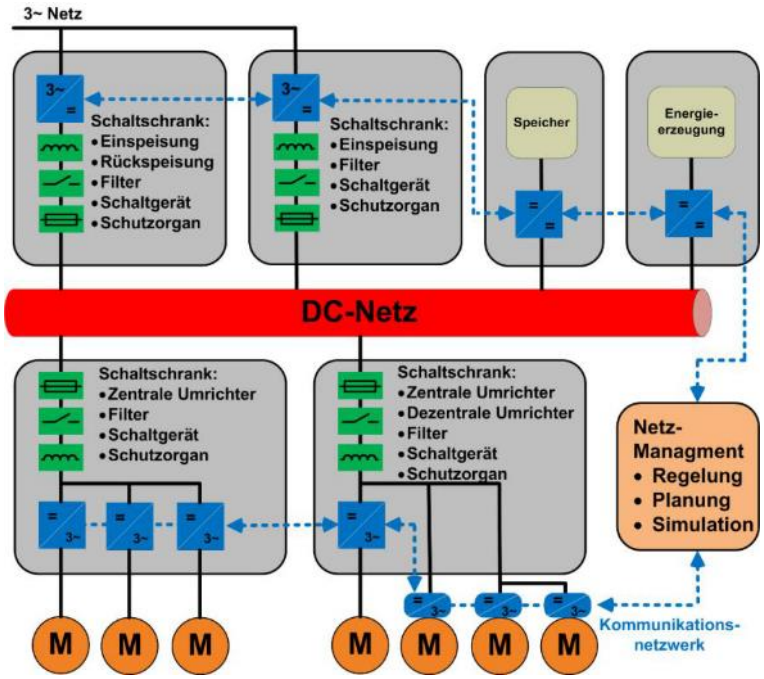

DC-INDUSTRIE
Intelligentes offenes DC-Netz in der Industrie für hocheffiziente Systemlösungen mit elektrischen Antrieben

SIEMENS
Weidmüller
Fraunhofer IISB
DAIMLER
KHS
Danfoss
Bauer Gear Motor
Hochschule Ostwestfalen-Lippe University of Applied Sciences
Fraunhofer IPA
Rexroth Bosch Group
LTI MOTION
Universität Stuttgart Institut für Energieeffizienz in der Produktion EEP
BAUMÜLLER
Lenze
ZVEI: Die Elektroindustrie

- Funding volume ca. 10.000.000 €
- Duration: 07/16 – 06/19

Julian Kaiser
Intelligent Energy Systems / DC Grids

Fraunhofer IISB

Your Partner for leading-edge Power Electronics

Bernd Wunder

Schottkystrasse 10, 91058 Erlangen

Tel.: 09131/761-597
bernd.wunder@iisb.fraunhofer.de
www.iisb.fraunhofer.de

Publications

Y. Han, J. Kaiser, L. Ott, M. Schulz, F. Fersterra, B. Wunder, M. März: *Non-isolated three-port DC/DC converter for ±380 VDC microgrids*. PCIM, Nuremberg 2016

L. Ott, J. Kaiser, K. Gosses, Y. Han, B. Wunder, M. März: *Model-Based Fault Current Estimation for Low Fault-Energy in 380 VDC Distribution Systems*. INTELEC 2016, Austin, TX, 2016

Wunder, B., Ott, L., Han, Y., Kaiser, J., März, M.: *Voltage Control and Stabilization of Distributed and Centralized DC Micro Grids*. PCIM, Nuremberg 2015

Wunder, B., Ott, L., Kaiser, J., Han, Y., Fersterra, F., März, M.: *Overview of Different Topologies and Control Strategies for DC Micro Grids*. IEEE ICDCM, Atlanta, 2015

Wunder, B., Kaiser, J., Fersterra, F., Ott, L., Han, März, M.: *Energy Distribution with DC Microgrids in Commercial Buildings with Power Electronics*. EDST, Vienna, 2015

Ott, L., Han, Y., Stephani, O., Kaiser, J., Wunder, B., Maerz, M.: *Modelling and Measuring Complex Impedances of Power Electronic Converters for Stability Assessment of Low-Voltage DC-Grids*, ICDCM, Atlanta, 2015

Ott, L., Han, Y., Wunder, B., Kaiser, J., Fersterra, F., Schulz, M., Maerz, M.: *An Advanced Voltage Droop Control Concept for Grid-Tied and Autonomous DC Microgrids*. INTELEC, Osaka, 2015

Weiss, R., Ott, L., Boeke, U.: *Energy Efficient Low-Voltage DC-Grids for Commercial Buildings*. ICDCM, Atlanta, 2015

Rykov, K.; Duarte, J. L.; Szpek, M; Olsson, J.; Zeltner, S.; Ott, L.: *Converter Impedance Characterization for Stability Analysis of Low-Voltage DC-Grids.* ISGT 2014, Washington D. C., 2014

K. Rykov, L. Ott, J. L. Duarte, E. Lomonova: *Modelling of Aggregated Operation of Power Modules in Low-Voltage DC Grids.* EPE, Laapeeranta, 2014

Rykov, K.; Duarte, J. L.; Szpek, M; Olsson, J.; Zeltner, S.; Ott, L.: *Converter Impedance Characterization for Stability Analysis of Low-Voltage DC-Grids.* ISGT 2014, Washington D.C., 2014

Fraunhofer IISB